12888DH1A-A MULTI-DIRECTION PENDULUM HOLDER

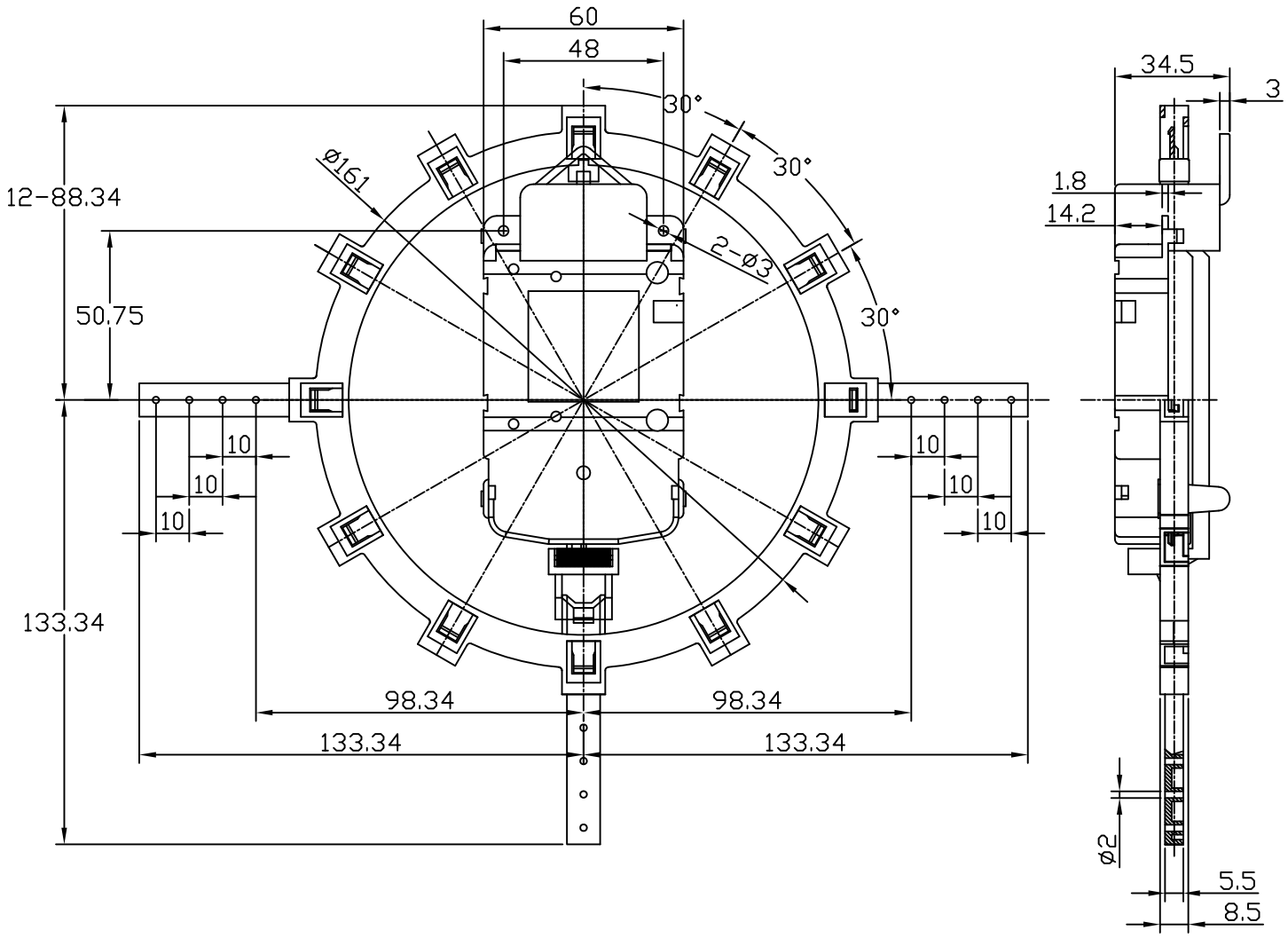

DIMENSION: 176.7Wx176.7Hx34.5D

*UNIT : m/m

NO.	Description
12888DH1A-A	Max.Pendulum Swing : 30° Max.Pendulum Weight : 50g(Bottom Pendulum), 19g(Others) Others must be balance with center.
12888DH2A-A	Max.Pendulum Swing : 30° Max.Pendulum Weight : 100g(Bottom Pendulum), 30g(Others) Others must be balance with center.

SPECIFICATIONS

Operating Voltage : 1.3V ~ 1.7V

Current Consumption : Less Than 550μA At 1.5V DC.(12888DH1A -A)

: Less Than 2mA At 1.5V DC.(12888DH2A-A)

Operating Temperature Range : -10°C ~ +60°C

20231016

YOUNG TOWN