# C2-A Perpetual Calendar Clock Module

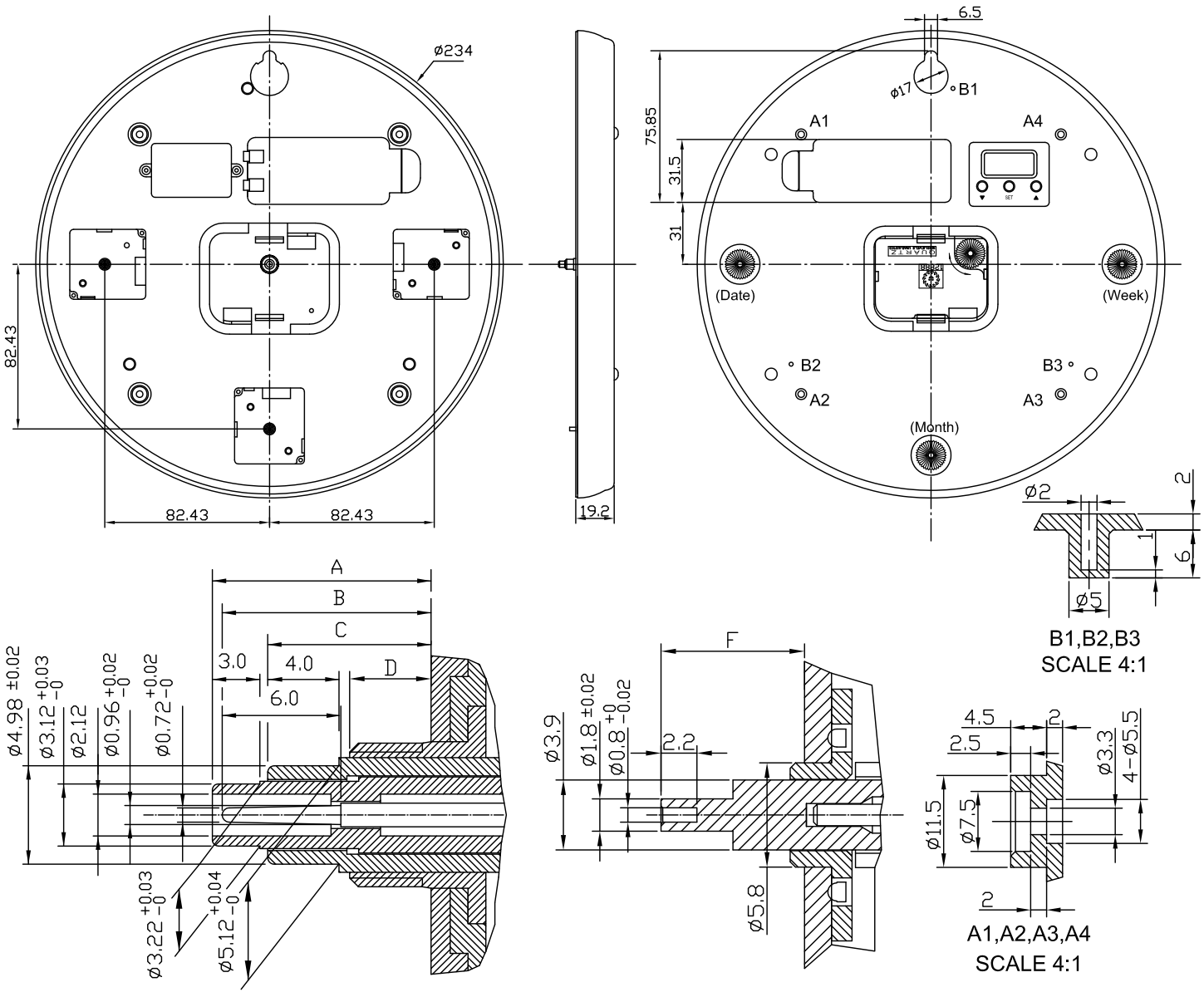


*UNIT:m/m

| SPEC / TYPE | A | B | C | D | F | DESCRIPTION |
|---|---|---|---|---|---|---|
| C2-ASOWMD | 12.5 | 11.7 | 9.0 | 5.0 | 2.5 | STANDARD MOVEMENT |
| C2-ASC1WMD5.0 | 15.0 | 14.2 | 11.5 | 7.5 | 5.0 | AUTO WEEK,DATE,MONTH MOVEMENT |
| C2-ASC5WMD5.0 | 18.0 | 17.1 | 14.5 | 10.0 | 5.0 | |
| C2-ATOWMD | 12.5 | 11.7 | 9.0 | 5.0 | 2.5 | SWEEP MOVEMENT |
| C2-ATC1WMD5.0 | 15.0 | 14.2 | 11.5 | 7.5 | 5.0 | AUTO WEEK,DATE,MONTH MOVEMENT |
| C2-ATC5WMD5.0 | 18.0 | 17.1 | 14.5 | 10.0 | 5.0 | |

## SPECIFICATIONS

| | |
|---|---|
| OPERATING VOLTAGE | 2.5V~3.2V |
| TIME KEEPING ACCURACY | ±30SEC/MONTH AT 1.5V DC. |
| CURRENT CONSUMPTION | LESS THAN 150μA AT 1.5V DC. 25°C (UNADJUSTED)(TIME) |
| TORQUE AT SECOND HAND | LESS THAN 0.6 (GF-CM) (STANDARD MOVEMENT)<br>LESS THAN 0.6 (GF-CM) (SWEEP MOVEMENT) |
| TORQUE AT MINUTE HAND | LESS THAN 36 (GF-CM) |
| OPERATING TEMPERATURE RANGE | -10°C~60°C |
| BATTERY LIFE | ABOUT 1 YEAR (UM-3 x 2) |

2023-08-07

YOUNG TOWN